EXCELL RAILING SYSTEMS LTD.

Fascia Mounted PUP Post Installation Process

SEE FASTENER SHEET
FOR FASTENER LISTINGS

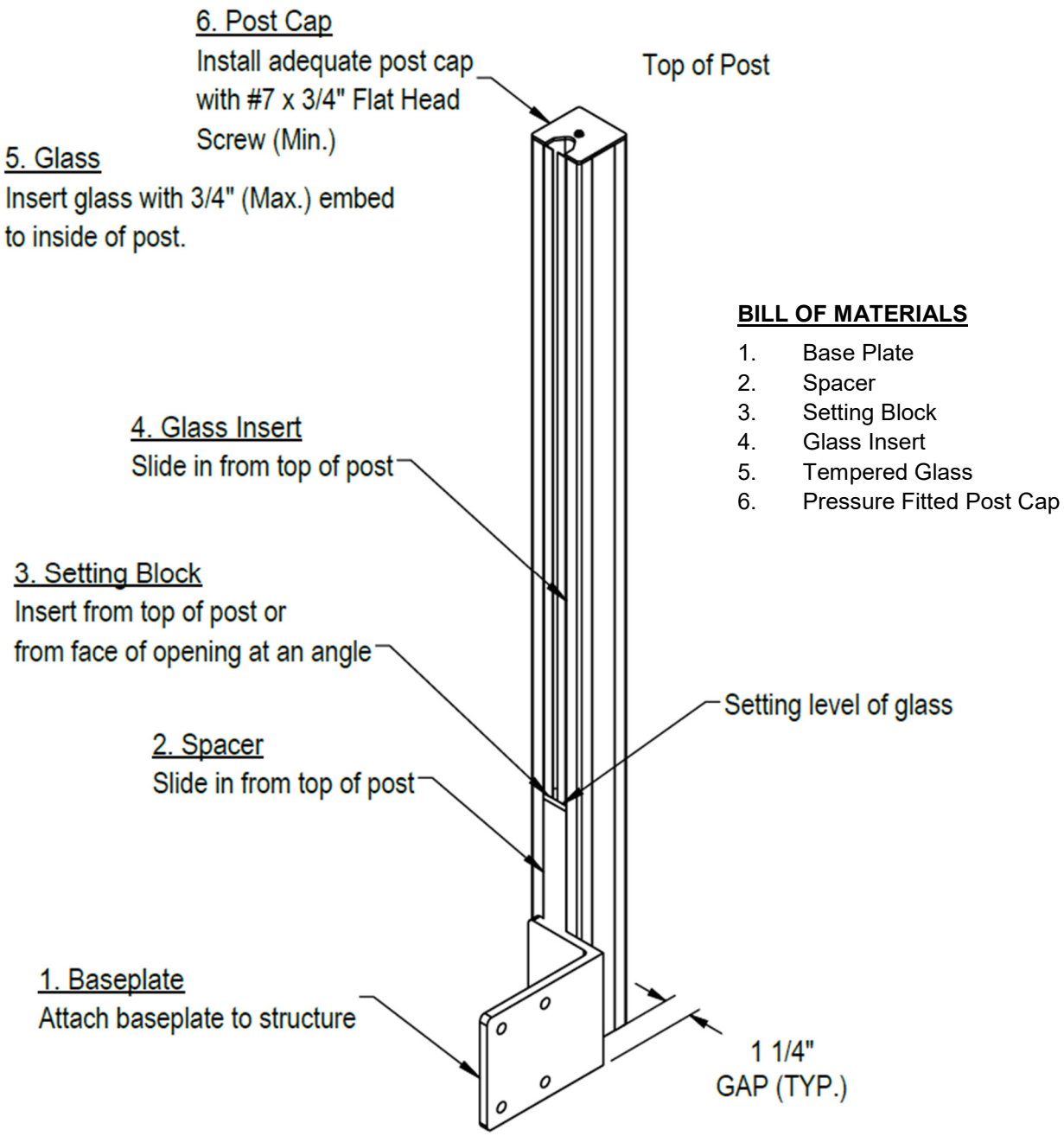

BILL OF MATERIALS

1. Base Plate
2. Spacer
3. Setting Block
4. Glass Insert
5. Tempered Glass
6. Pressure Fitted Post Cap

THE MATERIAL CONTAINED HEREIN IS PROPRIETARY TO EXCELL RAILING SYSTEMS LTD AND SHALL NOT BE REPRODUCED, DISCLOSED, OR USED FOR ANY OTHER PURPOSE WITHOUT THE WRITTEN APPROVAL OF EXCELL RAILING SYSTEMS LTD